TMI
Technical Metal Industrial Co. L.L.C.
Tel: +971 (2) 5502025 Fax: +971 (2) 5502024 P.O. Box: 41558 Abu Dhabi U.A.E.
E-mail: tmi@tmico.ae Web: www.tmi-co.com

ED 02 - M/Y 09/11

TMI

Industrial & IT Cabinets

TMI

Technical Metal Industrial Co. L.L.C.
Tel: +971 (2) 5502025 Fax: +971 (2) 5502024 P.O. Box: 41558 Abu Dhabi U.A.E.
E-mail: tmi@tmico.ae Web: www.tmi-co.com

Tel: +971 (2) 6448330
Fax: +971 (2) 6448322
P.O. Box: 41558
Abu Dhabi

Tel: +971 (3) 7224768
Fax: +971 (3) 7224769
P.O. Box: 99155
Al Ain

Tel: +971 (4) 8858036
Fax: +971 (4) 8858658
P.O. Box: 86029
Dubai

Tel: +971 (7) 2282332
Fax: +971 (7) 2282232
P.O. Box: 33239
Ras Al Khaimah

Table of CONTENTS

Management Foreword 2

Company Profile 3

About TMI Cabinets 4

Networking & Server Cabinets 6

Wall Mounted Series 11

Etisalat & Du Approved Cabinets 14

Accessories 17

Custom Designed Cabinets 18

Surface Protection 19

Management Foreword

Dear Clients,

Dear Partners,

We always looked at our company as an exceptional opportunity to build a world class company, deploying latest technologies and best practices. We draw our strength through the loyalty of our clients as well as through a highly motivated and well qualified work force, fully equipped with necessary training and development.

Our **Vision** is to be the leader in the Middle East when it comes to Metal Processing and Manufacturing. Fantastic efforts and huge investments have been exerted towards reaching that target, however, we consider ourselves still to be at the beginning.

We see it as our **Mission** to maximize our added value and to meet our clients' expectations. We intend to do so by building *TMI* to be a state-of-the-art company, by being reliable and cost effective in our business, and last but not least, by conforming to the highest safety, health, environment and quality standards.

Dear friends, all those who know *TMI*, know that our corporate principals do concentrate themselves on 4 main aspects:

People: we respect the diversity of our people and support their welfare. We are committed to the development of our work force

Partnership: we synergize with our clients to build a productive, collaborative and trusting relationship. We adopt team spirit and openness to achieve successfully our business objectives and those of our clients.

Professionalism: we conduct our business with competence in ethical, responsible and accountable manner

Pride: we take pride in what we do. We are committed to excellence, safety, quality and environment

I would like to assure you that *TMI* will always be proud to serve you. It is our goal to serve you best & to offer you our products, solutions and services for reasonable and fair prices. We will be looking forward to hearing from you.

Yours,

Johnnie Karkabi

Managing Director

Company Profile

Established in 1997 in Abu Dhabi, UAE as a privately owned entity, specializing in Metal Processing and Manufacturing of Cable Trays, Cable Ladders and their related accessories, Expanded Metal Plastering Products, Block Works, Metal Roll Forming, Suspended Ceilings, Wall Partitions and Metal Fire-Proof Doors. Since 2010, we are manufacturing as well **Industrial & IT Cabinets** and soon we will add Industrial Shelving to *TMI*'s portfolio.

Our main plant and administration offices are located in the Industrial City of Abu Dhabi (ICAD), Mussafah consisting of over 500,000 sq feet of closed manufacturing space. In addition to our dedicated storage and logistics facility over 180,000 sq feet of space supported by *TMI*'s fleet of vehicles, enabling us to serve the UAE and the region quick, efficient, and in timely manner.

Our believe in the highest product value and prompt delivery to our clients has driven us to continuously seek and utilize the best manufacturing equipment: CNC Turret Punching, CNC Press Brake, CNC Shearing Machines, CNC Roll Forming Line, Iron Workers and fully Automated Powder Coating lines. In addition to an in-house Galvanizing Facility supported by a fully capable in-house laboratory coupled with the stringent quality control systems. Thus ensuring high quality standards supported by continued work force training and effective scrap metal disposal system, controlled through our ISO 9001 and ISO 14001 certifications, has earned us approvals from International Consultants, Contractors and Subcontractors.

About TMI Cabinets

TMI cabinets and racks offer a wide variety of products that protect and enhance the look of your electronic environment. Our server/ networking racks are top efficient and ready to use for network distribution. Our *TMI* rack is cost effective and offers you the robust 19”(482.6mm) mounting frame. Cabinets and racks are available in standard height, width and depth, that ranges from 6U wall mounted racks to 47U fully enclosed and customizable cabinets. All *TMI* wall mounted and free standing cabinets have multiple cable entry from the top and bottom. They also can take load “weight” that meets and exceeds the industry standards. In addition, we offer a full range of accessories, such as shelves, PDUs and cable management accessories.

TMI cabinets and racks are constructed from steel sheets. They are specially designed using CAD software, punched and cut by CNC Turret Punch machines, folded by CNC Press Brake machines, then joined together by spot welding. Special knockouts are added to the bottom and top panels, offering effortless cable access. In the case of wall mounted racks, keyholes are added to the back for easy hanging. *TMI* cabinets and racks go through degreasing and phosphating treatment for corrosion prevention, before proceeding to our powder coating line.

TMI has a variety of doors styles:

- Solid or perforated steel.
- Full glass.
- Steel and glass combination ordered design.

TMI cabinets & racks are manufactured according to structural performance criteria:

- Maximum door opening angle is 90° - 120°.
- We can manufacture and deliver any specially ordered design.
- Variety of color options.
- Adjustable 19” mounts.
- Lock and handle.
- Powder coated surface finish.
- Can be delivered as flat - pack.

Networking & Server Cabinets

TMI Networking cabinets are available in standard heights, widths and depths. Height: 32U, 42U & 47U. Width: 600 & 800 mm. Depth: 800 & 1000 mm.

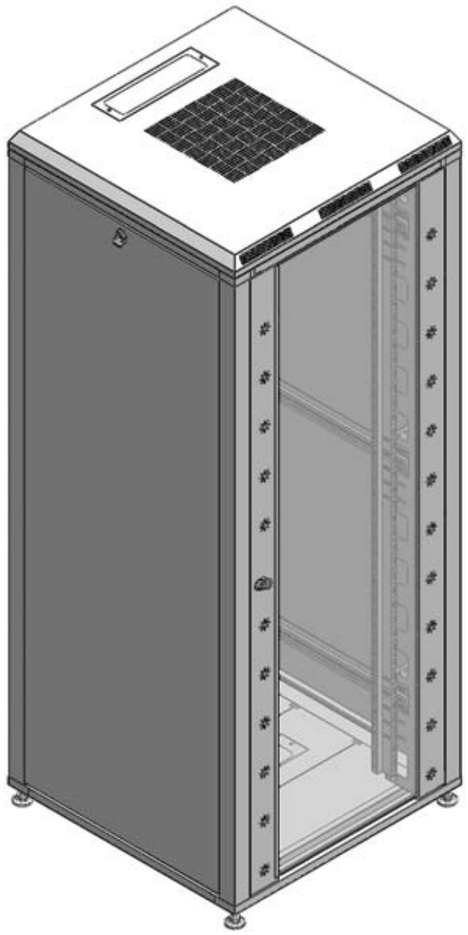

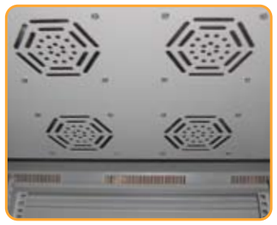

Material Specifications:

Cold rolled steel.
Thickness: 1.2 - 1.5 mm.
Loading capacity: 1100 lbs (500 kg).
Surface finish: Degreased and phosphated for corrosion prevention.
Powder coating in RAL 7035 (Light Grey) - Textured.

Features:

- Efficiently designed 32U, 42U, 47U server cabinets.
- Solid steel welded & bolted frame to ensure stability.
- Ventilated glazed front door and ventilated steel rear door.
- Pre-punched holes on the top and rear of the cabinet for good ventilation.
- Pre-punched holes and opening on the top and bottom of the cabinet for cable entry maximum versatility.
- Plug - in side wall.
- Bottom plate with multi piece gland plate.
- Heavy duty leveling feet.
- Supplied as flat pack, easy to assemble.
- Earthing of all enclosure panel possible through copper coated bolts.

Color Options:

- Other RAL colors are available upon request.

Technical Drawings

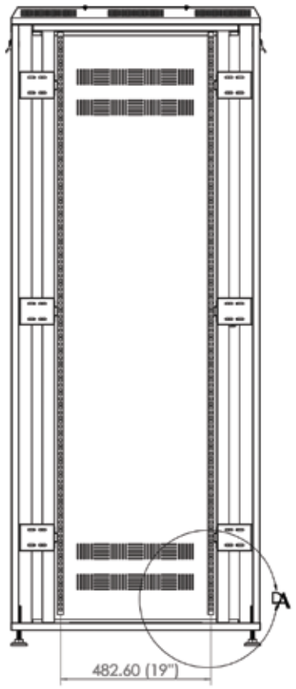

Inside View

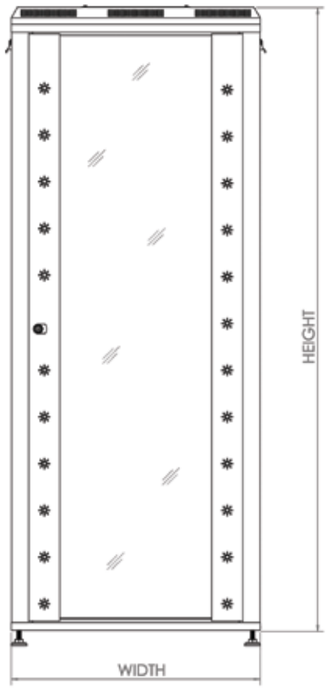

Front View

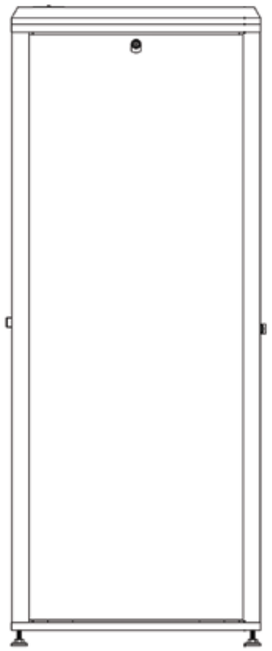

Side View

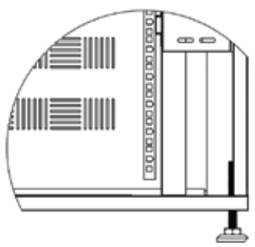

Detail A

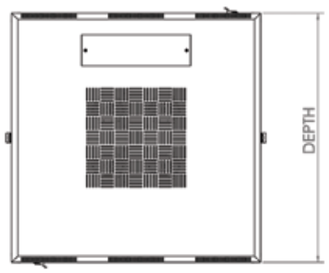

Top View

Exploded View

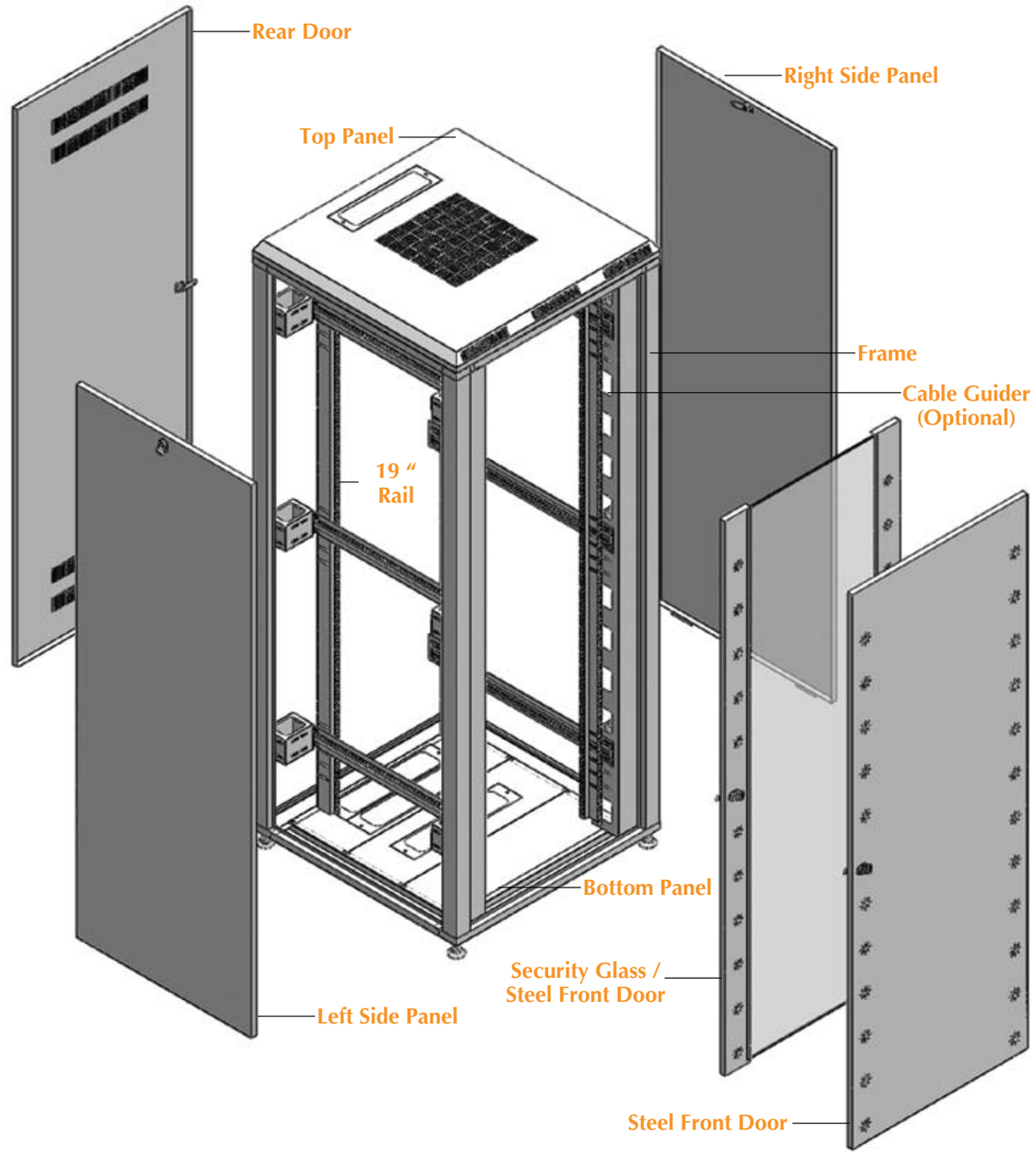

Supply Includes:

- Enclosure with doors, front glazed door, rear steel door, both are ventilated.
- 19 " – Mounting angles in the front and rear.
- Roof plate with cable entry and ventilation. Bottom with multi – piece gland plate.
- Plug-in side wall (Optional with lock).
- Earthing of all enclosure panels possible.
- Leveling feet.
- RAL 7035 Textured (Light Grey).
- Optional: RAL 9005 Textured (Black).

Ordering Information:

Networking Cabinets

19'' *TMI* cabinet width 600, 800 / depth 800, 1000

Model	Rack Units (U)	Width (W) mm	Depth (D) mm
ITR 168321	32	600	800
ITR 168421	42	600	800
ITR 168471	47	600	800
ITR 188321	32	800	800
ITR 188371	37	800	800
ITR 188421	42	800	800
ITR 188471	47	800	800
ITR 160321	32	600	1000
ITR 160421	42	600	1000
ITR 160471	47	600	1000
ITR 180321	32	800	1000
ITR 180371	37	800	1000
ITR 180421	42	800	1000
ITR 180471	47	800	1000

Server Cabinets

19'' *TMI* cabinet width 800 / depth 1000, 1200

Model	Rack Units (U)	Width (W) mm	Depth (D) mm
ITR 480421	42	800	1000
ITR 482421	42	800	1200
ITR 480471	47	800	1000
ITR 482471	47	800	1200

Wall Mounted Series

TMI 19'' wall mounted cabinets are available in standard heights, widths, and depths. Height: 6U, 9U, 12U, 15U, 18U & 21U. Width: 600 mm. Depth: 450 & 550 mm.

Material Specifications:

Cold rolled steel.

Thickness: 1.0 - 1.2 mm.

Loading capacity: 60 kg - 100 kg.

Surface finish: Degreased and phosphated for corrosion prevention.

Powder coating in RAL 7035 (Light Grey) - Textured.

Optional: RAL 9005 (Black) Textured.

Features:

- Wall mounting or free standing unit.
- Removable side and back panels.
- Fixed (welded) rear wall.
- Top and bottom panel cable entry.
- Ventilation fans are optional.
- Front glass and steel doors.
- Embedded grounding copper coated stud bolts.

Color Options:

- Other RAL colors are available upon request.

Technical Drawings

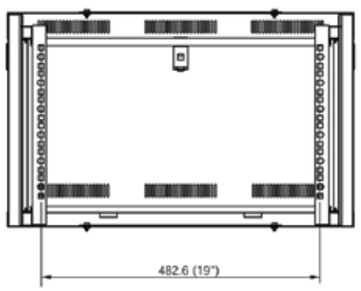

Inside View

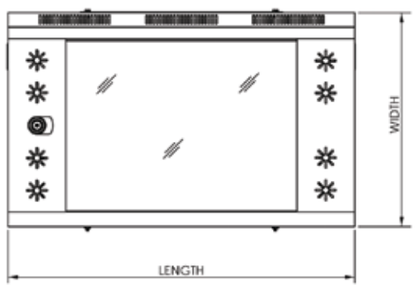

Front View

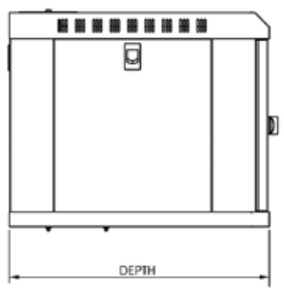

Side View

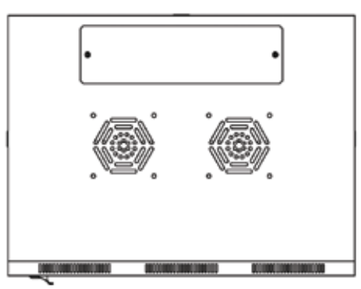

Top View

Exploded View

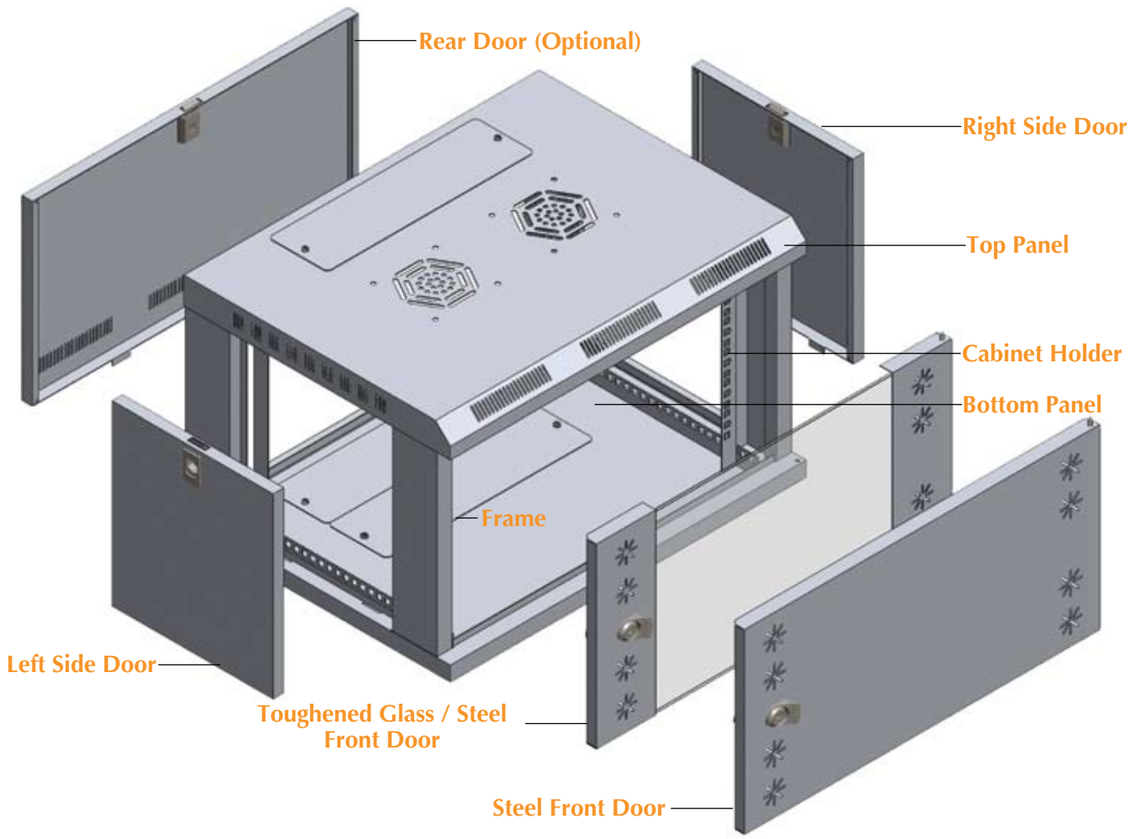

Ordering Information

Model	Rack Units (U)	Width (W) mm	Depth (D) mm
ITR 264061	6	600	450
ITR 264091	9	600	450
ITR 264121	12	600	450
ITR 264151	15	600	450
ITR 264181	18	600	450
ITR 264211	21	600	450
ITR 265061	6	600	550
ITR 265091	9	600	550
ITR 265121	12	600	550
ITR 265151	15	600	550
ITR 265181	18	600	550
ITR 265211	21	600	550

Etisalat & Du Approved Cabinets

TMI cabinets approved by Etisalat & Du are available in standard size of 12U. Width: 600 mm. Depths: 150 & 300 mm.

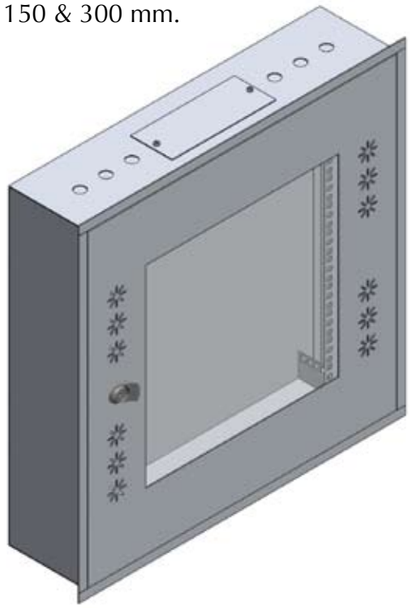

Framed Flush Mount

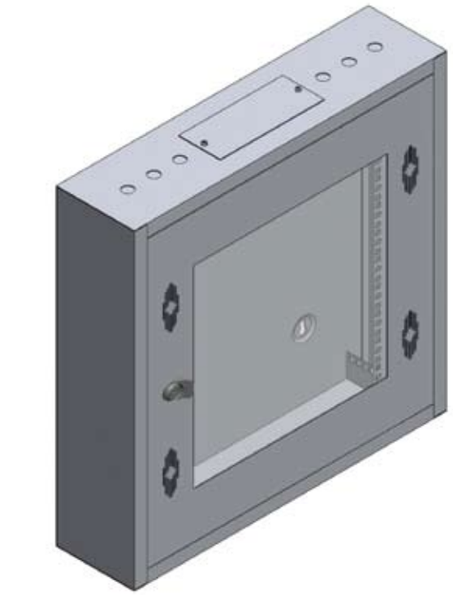

Wall Mount

Material Specifications:

Cold rolled steel.

Thickness: 1.0 - 1.2 mm.

Loading capacity: 60 kg.

Surface finish: Degreased and phosphated for corrosion prevention.

Powder coating in RAL 7035 (Light Grey) - Textured.

Model	Rack Units (U)	Width (W) mm	Depth (D) mm	Type
ITR 561121	12	600	150	Flush Mount
ITR 261121	12	600	150	Wall Mount
ITR 263121	12	600	300	Wall Mount

Features:

- Efficiently designed 12U server cabinets.
- Solid steel construction.
- Available on flush mounted and wall mounted.
- Adjustable 19″ mount.
- Mechanical open / close lock.
- Lock handle.
- Inner mount plate with grid mount.
- Top and bottom panel cable entry.
- Ventilation holes on front panel.
- Cabinet can be fitted with 1U patch panel.
- Embedded grounding copper coated stud bolts.
- Optional: different door designs - See Page 16

Color Options:

- Other RAL colors are available upon request.

Technical Drawings

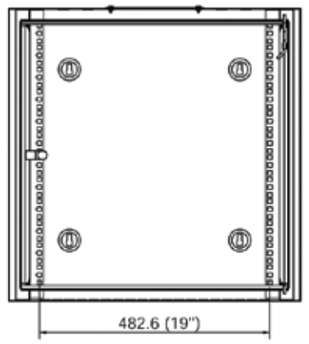

Inside View

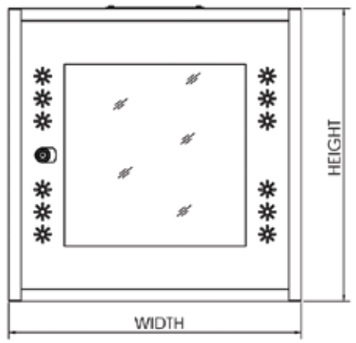

Front View

Side View

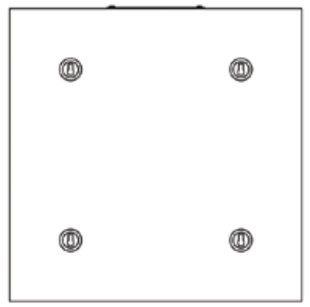

Rear View

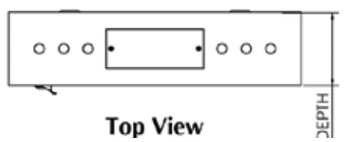

Top View

Door Design Options

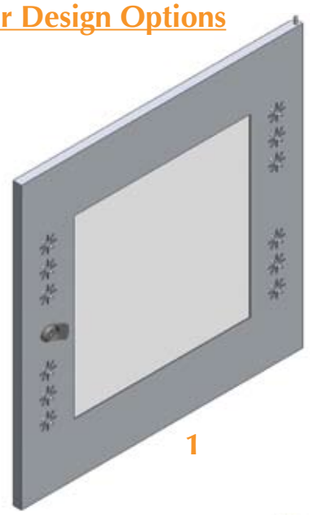

1

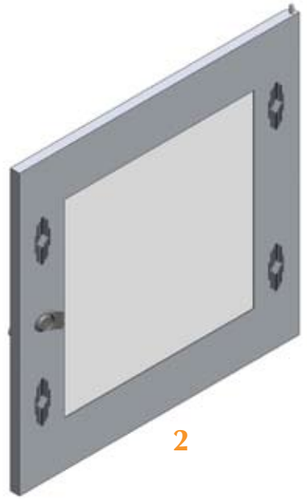

2

3

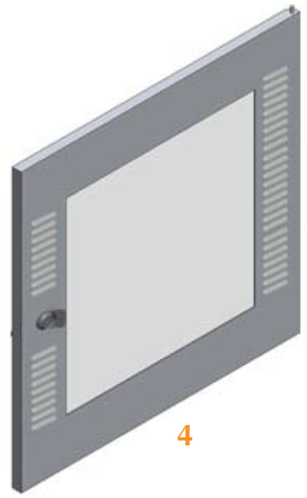

4

Choose your own design

Add the relevant – design number, either 1,2,3 or 4 behind your selected door Art – No.

Example: You need a 12U door in design No.3, then your order should show the following Art – No: **ITR 760123**

Door Ordering Information

Model	Rack Units (U)	Width(W) mm
ITR 86006	6	600
ITR 86009	9	600
ITR 86012	12	600
ITR 86015	15	600
ITR 86018	18	600
ITR 86021	21	600

Accessories

TMI is proud to offer complete accessories to suit your requirements. International brands are also supplied by *TMI* that offers quality, value, great customer benefits, and an independent choice for clients.

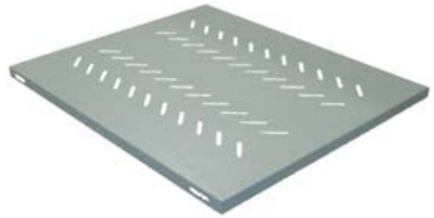

Rack

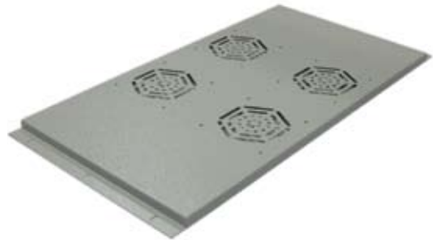

Fan Tray

Kit Containing a Set of 12 Stainless Steel Nuts Bolts, and Plastic Washers

PDU

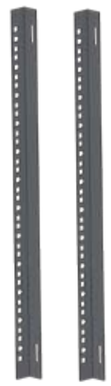

19“ Mounting Element

A Set of Castor Wheels with Brakes. Maximum loading capacity 250 kg/each

A Set of Castor Wheels. Maximum Loading capacity 250 kg

Custom Designed Cabinets

We can do any customized fabrication for server cabinets in any design or color. Sample models are shown below.

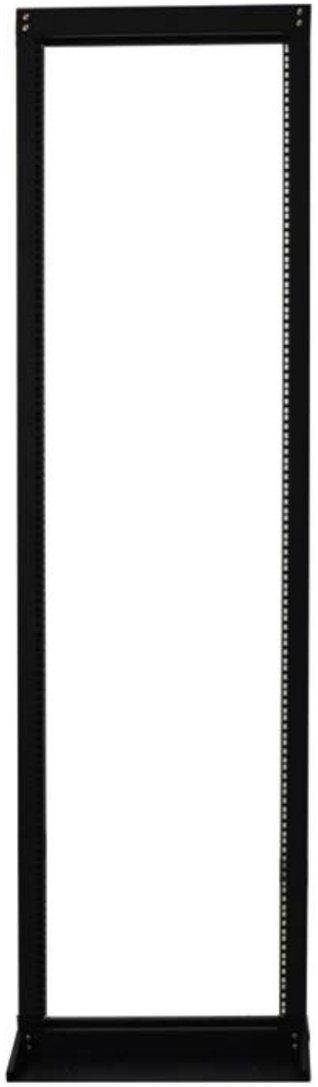

19″ Open Frame

Out Door Gas Cabinet

Gas Meter Cabinet

First Aid Cabinet

Special Design Cabinet

Metering Box

Cable Management

- We can manufacture and deliver to any specially ordered design.

Surface Protection

The treatment of outer surfaces:

- Degreasing of Sheet Steel.
- Sheet Steel is then phosphated.
- Powder Coating (60-80 micron).
- Stove enameling.

This procedure provides optimum corrosion protection for our Racks and Cabinets.

Standard Powder Coating is resistant to:

- Mineral Oil.
- Lubricants.
- Solvents (briefly e.g. during cleaning).
- Weak acids and alkaline.

Our quality is assured by continuous process monitoring.

Coating Procedures	Technical Properties
Degreasing and Phosphating	Used for passivation, as corrosion protection and to improve paint adhesion.
Textured Powder Coating	Powder coating is distinguished by a high level of mechanical resistance, excellent corrosion protection, good resistance to chemical, and by its temperature, weather and its facility for decontamination.